Thule Hull-a-port PRO 837

› Instructions

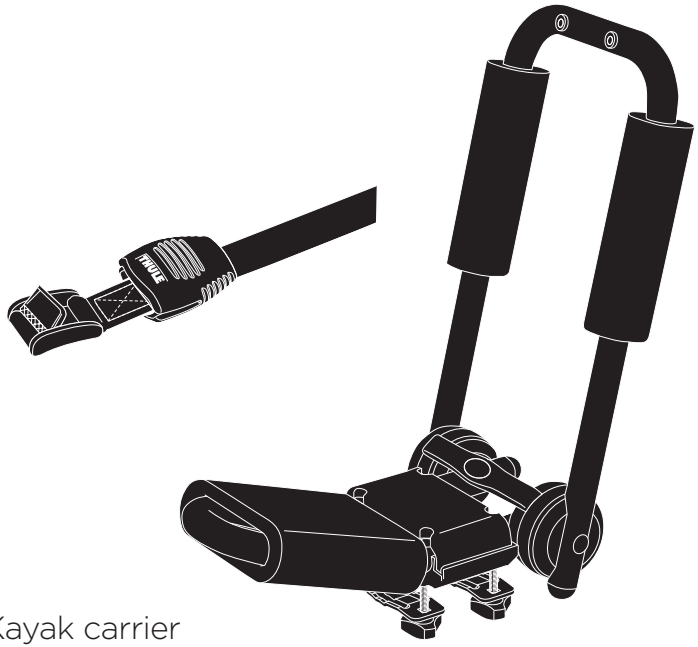

Kayak carrier

CITY CRASH
Complies with ISO norm

837000

C.20140305
501-7279-05

Bring your life
thule.com

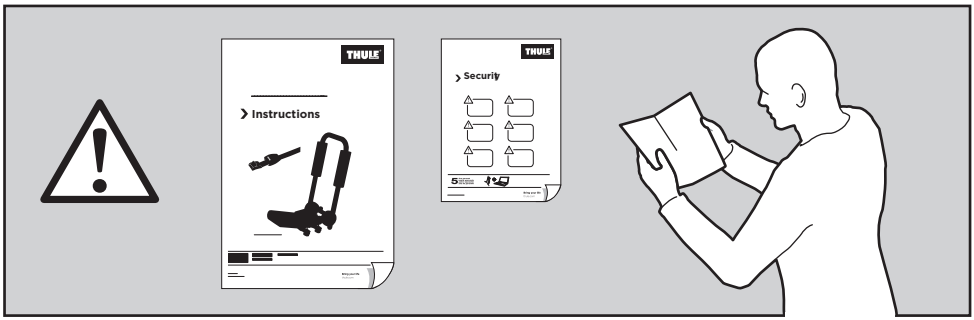

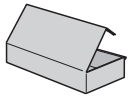

x2

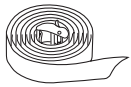
x2

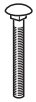
x8

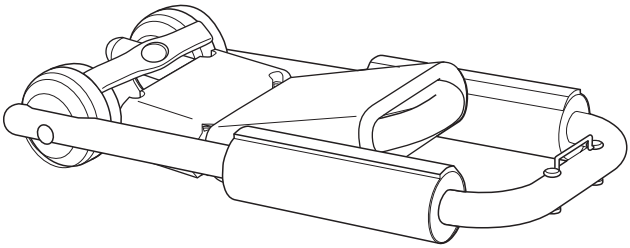
x2

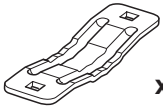
x4

x8

1

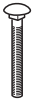
x4

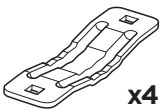
x4

x4

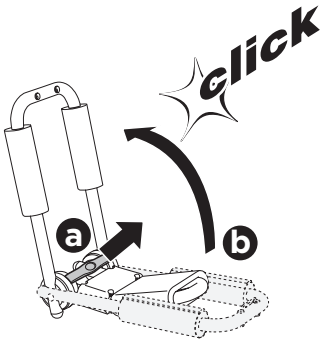

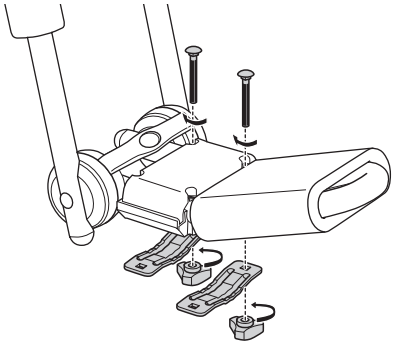
x2

2

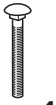

x4

x4

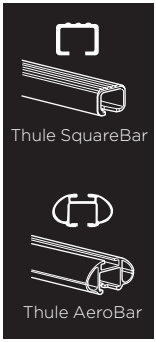

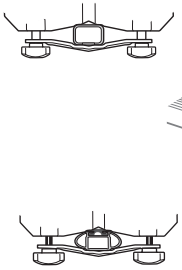

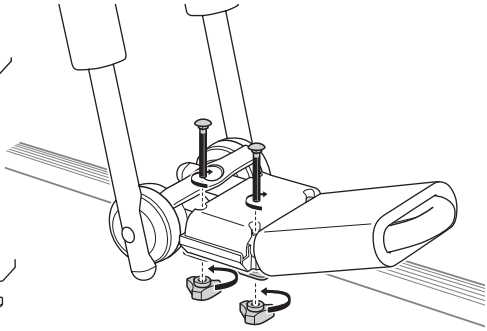

x2

i

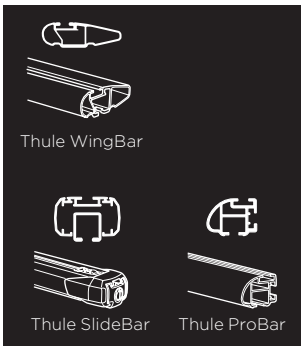

Thule
T-track adapter 881

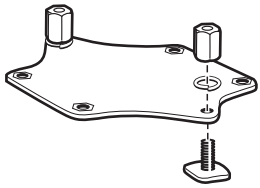

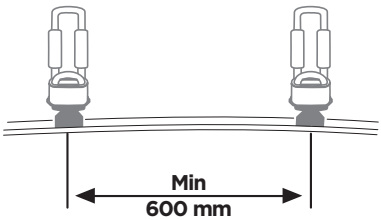

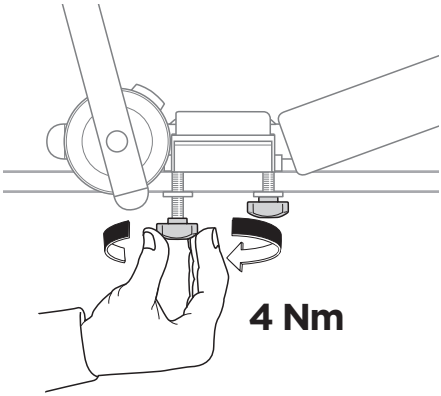

3

x2

x2

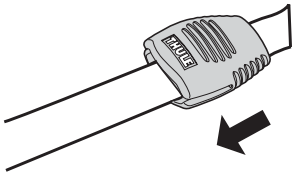

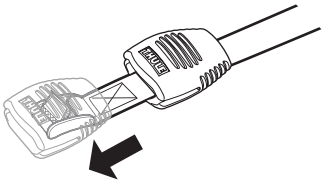

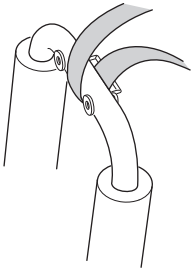

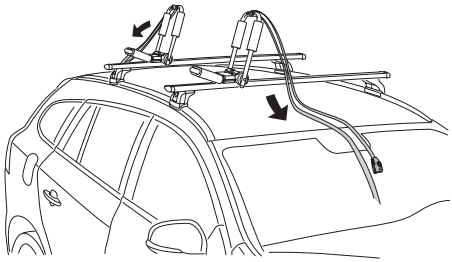

4

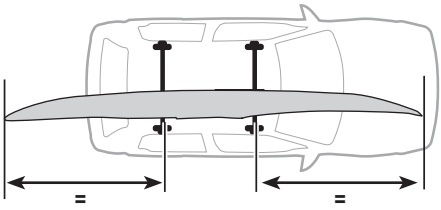

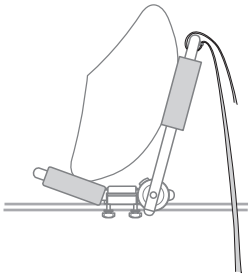

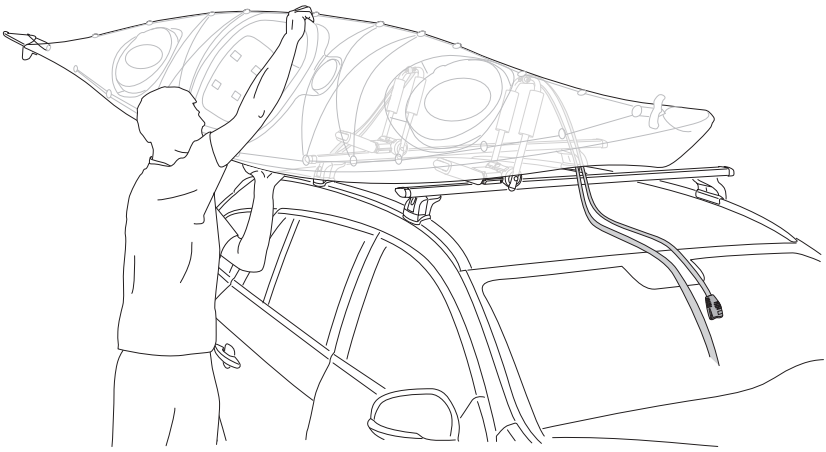

5

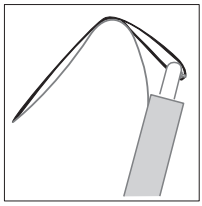

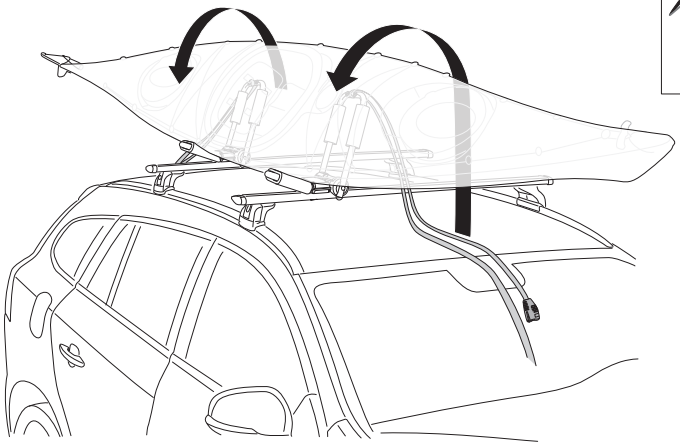

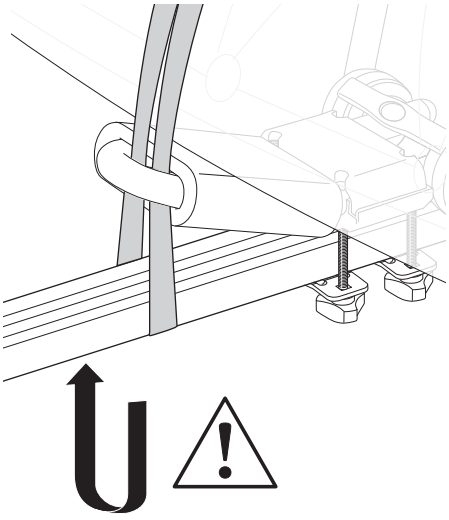

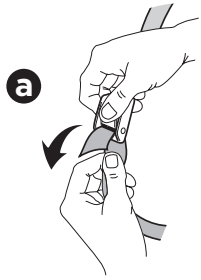

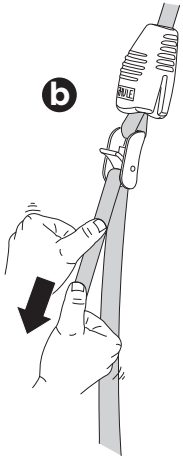

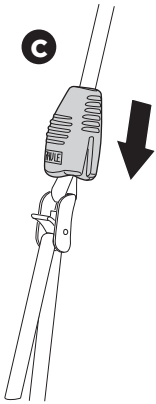

6

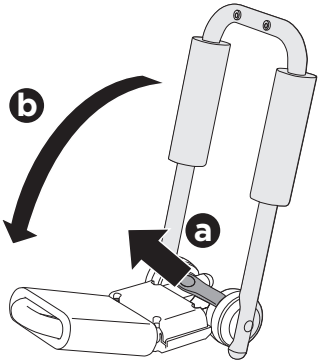

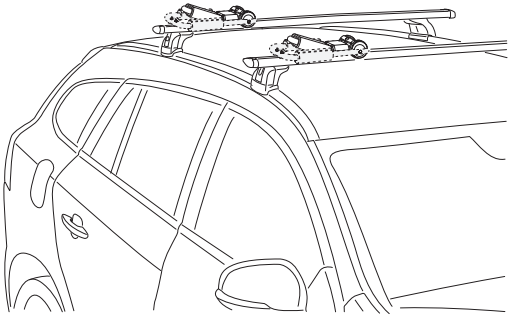

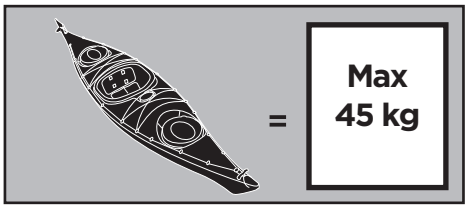

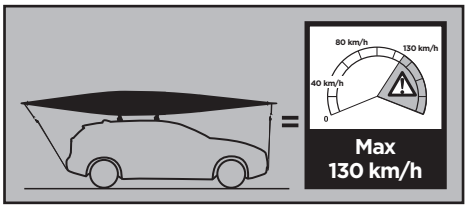

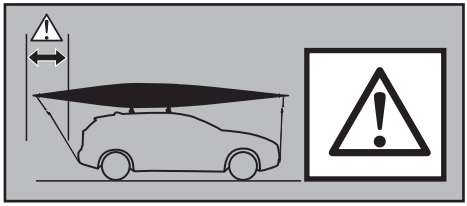

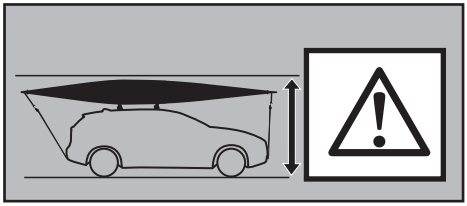

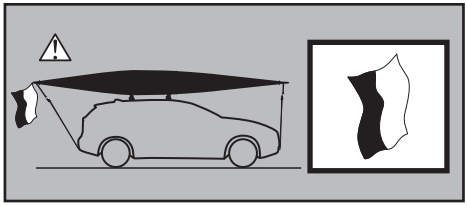

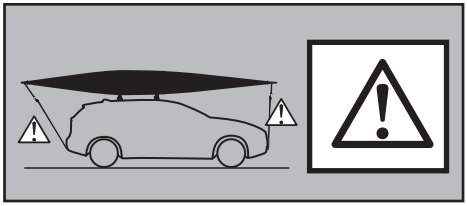

EN Accessories
DE Zubehör
FR Accessoires
NL Accessoires
IT Accessori
ES Accesorios
PT Acessórios
SV Tillbehör
DK Tilbehør
NE Tilbehør
FI Lisävarusteet
ET Lisavarustus
LV Piederumi
LT Priedai
PL Akcesoria
RU Аксессуары

UK Аксесуари
BG Принадлежности
CS Doplòky
SK Príslušenstvo
SL Dodatki
HR/BiH Dodaci
RO Accesorii
HU Tartozékok
EL Εξαρτήματα
TR Aksesuarlar
AR الملحقا
HE אביזרים
ZH 附件
JA アクセサリー
KO 액세서리
TH อุปกรณ์เสริม

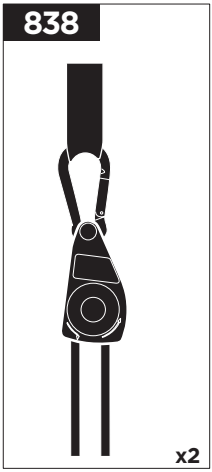

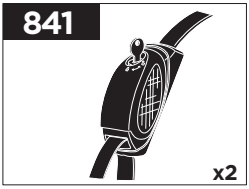

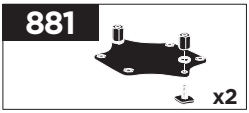

Thule One-Key System

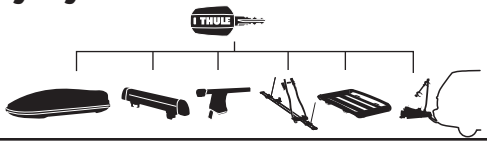

544 (x4)
596 (x6)
588 (x8)
452 (x12)

Thule Sweden AB, Box 69, 330 33 Hillerstorp, SWEDEN
info@thule.com
www.thule.com
» PART OF THULE GROUP
© Thule Group 2014. All rights reserved.
501-7279-05